Version 4.1.0.5 03 May 2026

LCD removed.
Sensors/Lasers moved to 5V
SD card wiring pin 17 moved to pin TX (GPIO 1)
Sound added

Version 4.0.1.0 November 2025
wiring for SD card added
wiring foTFT touch added
Optional parts wiring removed for simplicity.
Orange wires changed to blue for compatibility with connector kit.

Sensors

Sensor Out Colour	EPS32 Pin	Wire
sen3	33	Yellow
senM	25	Green
Sen1	32	Blue
GND	GND	Black
VCC	Vin	Red

Encoder

Encoder	ESp32 Pin	Wire Colour
3.3V	3V3	Red
Key	34	Blue
S2	36	White
S1	39	Yellow
0V	GND	Black

OptionalLight SensorGY-302

module	ESP32 Pin	Wire Colour
ADDR -	GND	Black
SDA	21	White
SCL	22	Yellow
GND	GND	Black
VCC	5V	Red

Optional LED Matrix

LED	ESP32 Pin	Wire Colour
Vcc	5V	Red
GND	0V	Black
DIN	23	Green
CS	15	White

Optional Speaker

Spkr	ESP32 Pin	Wire Colour
Red	17	White
Black	0V	Black

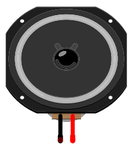

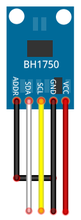

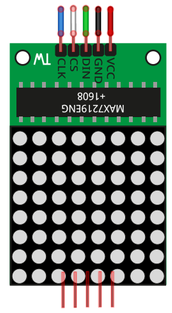

Caution:-
Both 3.3 Volt and 5 Volt devices are used.

3.3V wires are shown in Brown
5V wires are shown in Red.

When using JST connectors, there is no Brown wire, so use Red (or order seperate brown wires) but be very careul to ensure correct connections.

Transparent three legged sensors must be fitted with the flat surface at the rear and the little dome pointing over the board and towards the laser. Connecting them incorrectly WILL destroy them.

Caution
To avoid sensor damage, wire up the rx modules BEFORE plugging the transparent senors into them. Double check wiring BEFORE powering up the board & ensure LEDs light. Then de-power the board and insert sensors ENSURING the sensor is fitted the correct way round.

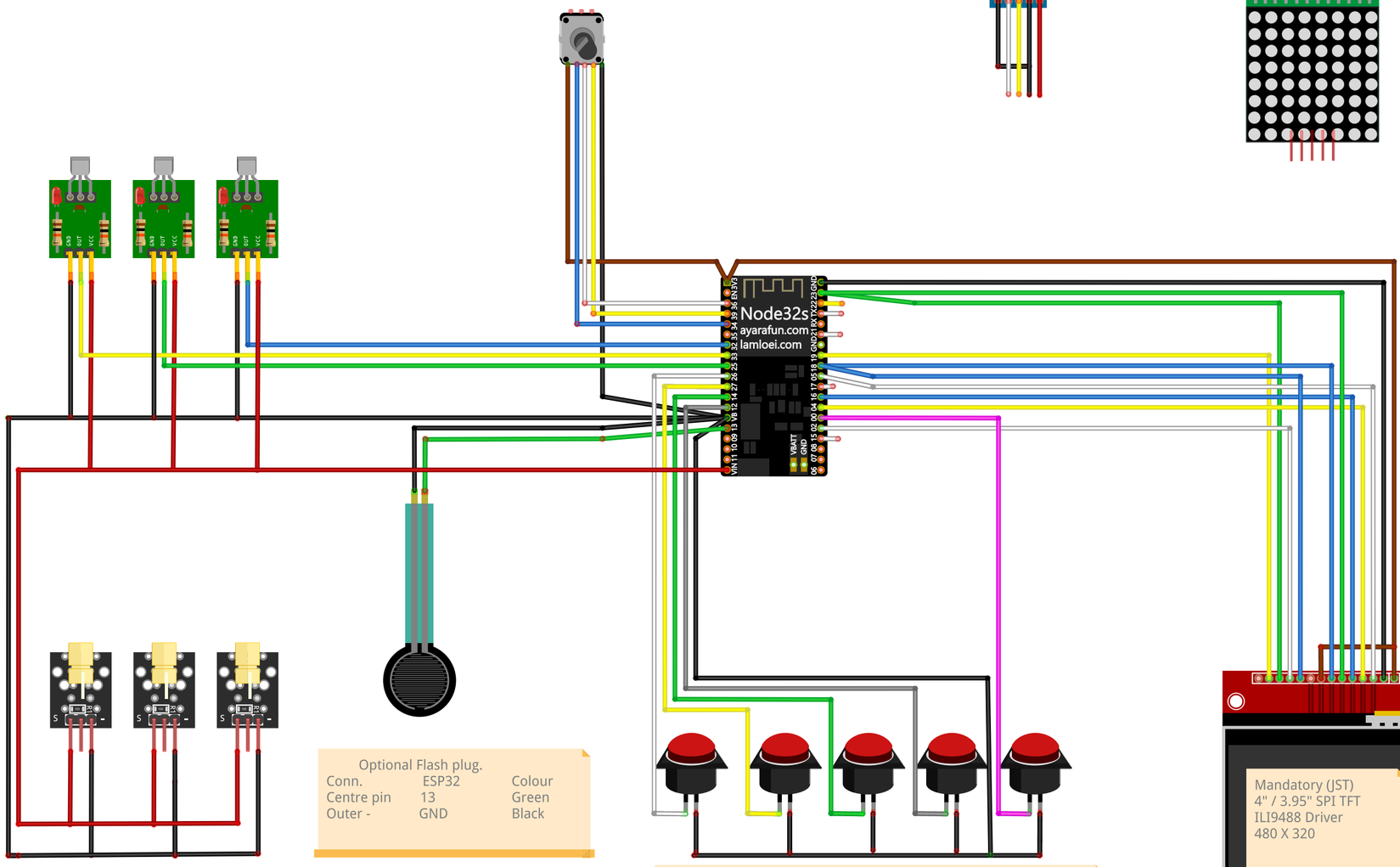

Optional Flash plug.

Conn.	ESP32	Colour
Centre pin	13	Green
Outer -	GND	Black

1	2	3	4	5
White	Yellow	Green	Black	Red
Pin 26	Pin 27	Pin 14	Pin 12	Pin 0
Display Ave	Ave-Reset	LightMeter	Menu	LED Matrix

Note:-
DO NOT use the GND pin on the EPS32 board, that is located between pins 19 & 21.

Caution
TFT is powered by 3V3

Ensure you correctly wire the TFT.

Caution on TFT Wiring.

Connector is on the rear of the TFT.
Ensure you do not wire up as a mirror image.

Mandatory (JST)
4" / 3.95" SPI TFT
ILI9488 Driver
480 X 320

Optional wiring for SD card

01/23/19/18

TFT pins in order	ESP32	Wire Colour	
TFT_VDD	3V3	Red	
TFT_GND	GND	Black	
TFT_CS	5	White	Chip select
TFT_RST	4	Yellow	Reset pin
TFT_DC	16	Blue	Data Command
TFT_MOSI	23	Green	
TFT_SCLK	18	Blue	
TFT_LED	3V3	Brown	
TFT_MISO	-----	do no connect	

Optional Touch Wiring

Touch_CCLK	18	Blue	
Touch_CS	2	White	
Touch_DIN	23	Green	MOSI
Touch_TFT_DO 19	Yellow	MISO	
Touch_IRQ		do not connect	

Optional Sd Card conections for dataLogger

CLK (SLK)	18	Blue
SDO (MISO)	19	Yellow
SDI (MOSI)	23	Green
SCS (CS)	1 TX	White

fritzing